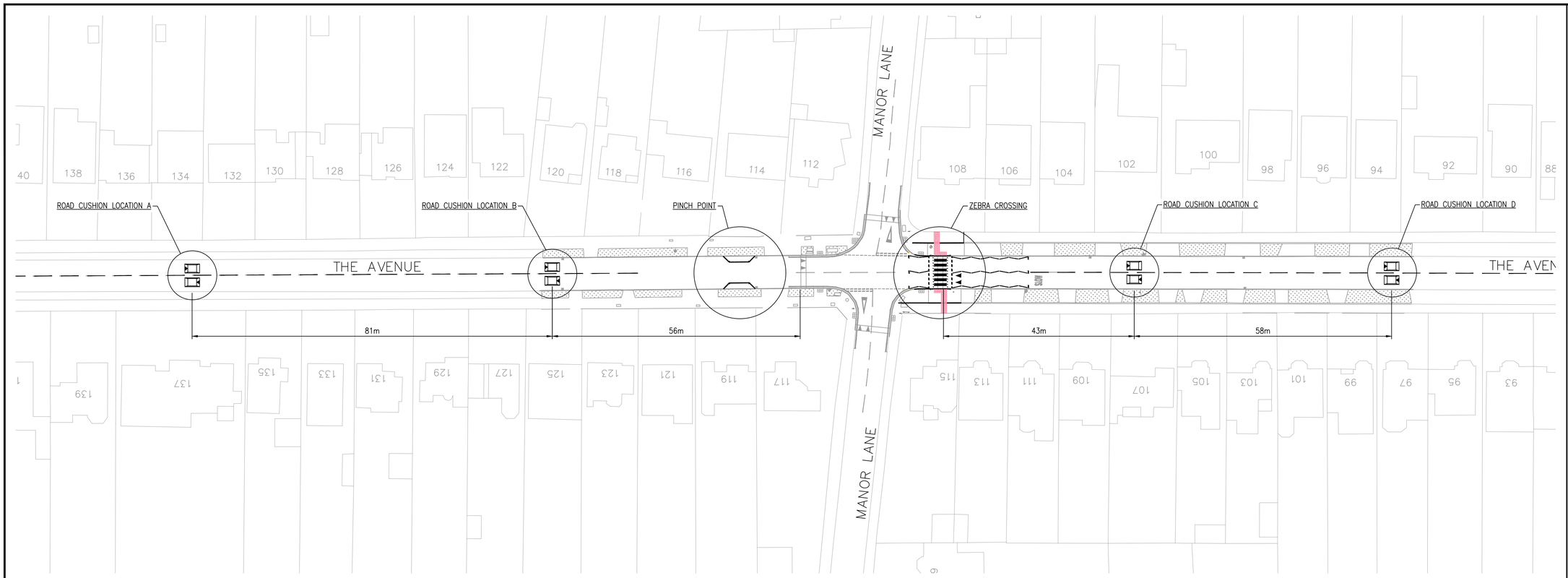

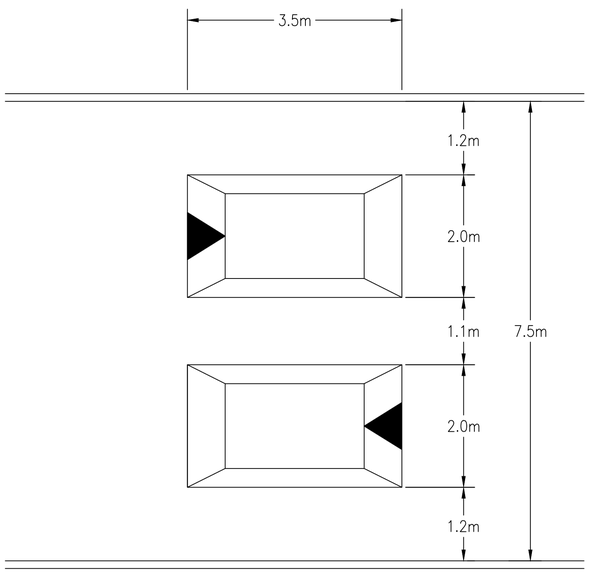

ROAD CUSHION DIMENSIONS

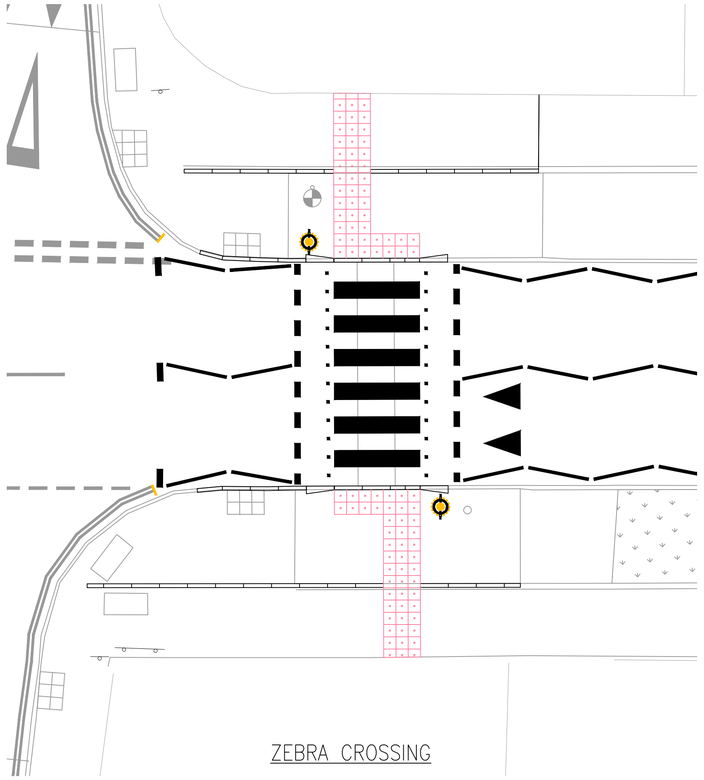

ZEBRA CROSSING

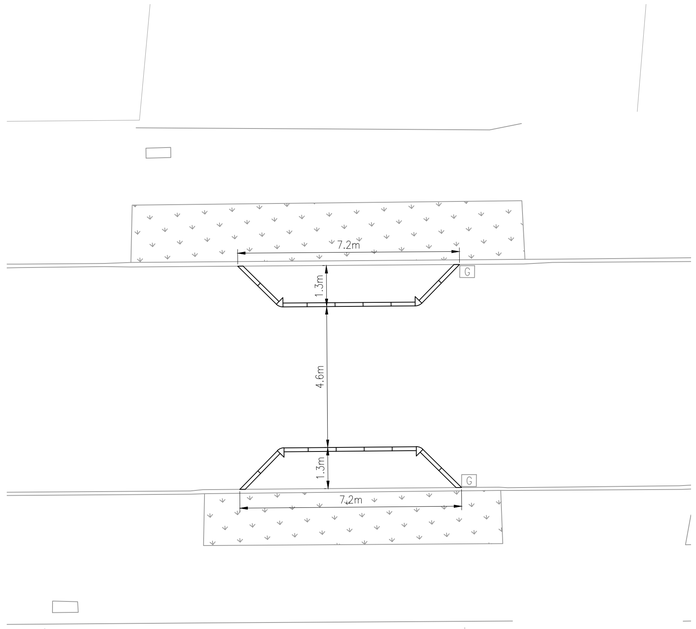

PINCH POINT

SAFETY, HEALTH AND ENVIRONMENTAL INFORMATION

In addition to the hazards/risks normally associated with the types of work detailed on this drawing, note the following significant residual risks. (Reference shall also be made to the Design Hazard Log)

CONSTRUCTION:

MAINTENANCE/CLEANING:

USE:

DECOMMISSIONING/DEMOLITION:

If is assumed that all works will be carried out by a competent contractor working, where appropriate, to an approved method statement.

Notes

Rev.	Description	Drwn	Sig.	Date	Chkd	Sig.	Date	Appr	Sig.	Date

File Name: \\surreycc.local\deptwide\EAI\PC all\Resource Pool\Projects\NE Spelthorne\PC1177 The Avenue, Shepperton\6. Drawings\Current\PC1177 Table Locations.dwg

Scale

North Point

"Based upon the Ordnance Survey mapping with the permission of the Controller of Her Majesty's Stationery Office © Crown copyright. Unauthorised reproduction infringes Crown copyright and may lead to prosecution or civil proceedings." Surrey County Council LA 076872 2002.

Drawn by TC	Sig. TC	Date SEPT 22
Checked by originator	Sig.	Date
Approved by	Sig.	Date

Project: THE AVENUE SHEPPERTON

Drawing: CONSULTATION PLAN

SHEET 1 OF 3

SURREY COUNTY COUNCIL

Project No. PC1177

Contract Sheet No.

Drawing No. PC1177_01

Rev. -

Classification PRESENTATION

A1